Parallel Garden Hose Reel
Assembly Instructions

Model GH150-PL

Material you'll need:
7/16" wrench
Drill
Hardware to mount reel

1

Mark mounting holes for wall plate.

2

Drill pilot holes.

3

Align wall plate with holes and tighten bolts. (Hardware not included)

4
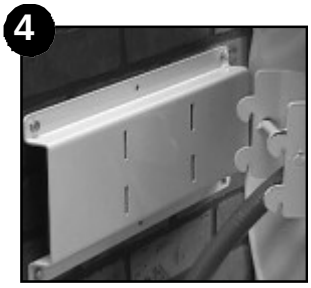
Mount Hose Reel

5

Attach handle to flange assembly.

6
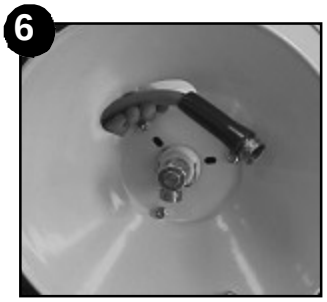
Feed garden hose through slot.

7

Make a large smooth loop. Do not bend or kink hose.

8

Place hose clamp on reel.

9

Tighten hose clamp to reel and reel in hose.

Warranty Registration for Model GH 150-PL

Serial # (found on hose reel)_____

1) Month and year purchased _____ /_____

2) Was this a gift? ___Yes ___ No

3) Purchased from:
- ___ Farm store
- ___ Auto parts store
- ___ Wholesale club
- ___ Mail order catalog
- ___ Tool distributor
- ___ Home center/hardware store
- ___ Internet/website

4) How did you find out about this product?
- ___ Store flyer/display
- ___ Mail order catalog
- ___ Magazine ad
- ___ Newspaper ad
- ___ Word of mouth
- ___ Internet/website

5) Did you consider other brands prior to purchasing this reel? ____Yes ____ No

6) Where will the reel be used most?
- ___ Mechanic shop
- ___ Body shop
- ___ Farm shop
- ___ Auto dealer
- ___ Service station/tire center
- ___ Home (garage, shop, etc.)
- ___ Marina
- ___ Aviation
- ___ Construction
- ___ Heavy equipment shop
- ___ Woodworking
- ___ Manufacturing
- ___ Public transportation
- ___ Other (please list) _____

Name _____

Address _____

City _____ State _____

Zip _____

E-mail address _____

GH150-PL Parallel Wall Mount

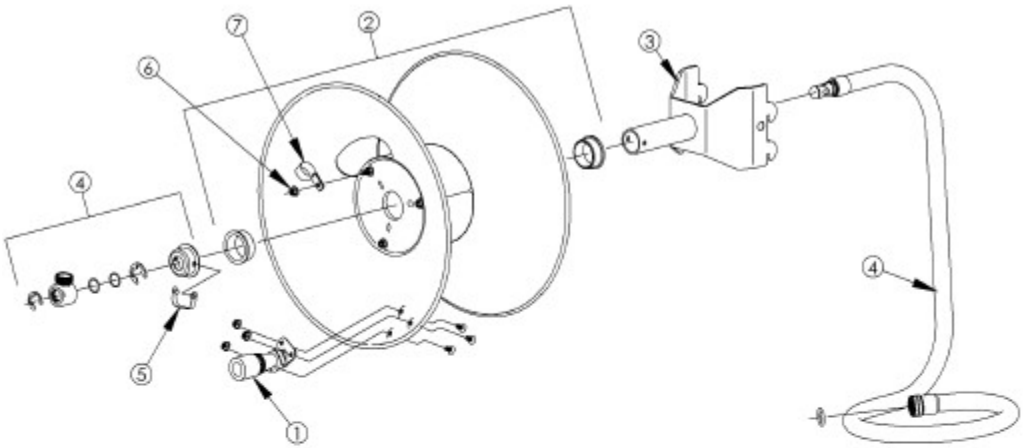

ITEM NO.	QTY.	PART NO.	DESCRIPTION
1	1	5001.027	Handle Assembly
	3	4102.003	Nut 1/4-20 SFL
	3	4101.004	Pan Head Screw 1/4"
2	1	9001.003	Flange Assembly 16
	2	4202.012	Bushing Axle
3	1	5001.089	Parallel 150 Mount Weldment
4	1	2005.003	GH Hose and Swivel Assembly 76"
	1	4201.016	Rotor Cap .88
	1	4201.020	E- Ring .875
	2	4201.029	018 O Ring
	1	5004.102	3/4" Housing Soldered
	1	4201.026	E- Ring E-75
	1	4301.104	Garden Hose Jumper Assy .75 x 76 inch
	1	4201.028	Hose Washer
5	1	4209.012	Snap Button Double
6	1	4102.003	Nut 1/4-20 SFL
7	1	9905.013	Hose Clip .88 Dia.

Model GH150-PL Specifications:

- Maximum Pressure 225 psi
- Maximum Capacity
  100 ft. of 3/4" ID hose
  150 ft. of 5/8" ID hose
  250 ft. of 1/2" ID hose
- Maximum Temp. 100ºF
- Weight 22 lbs.

WARRANTY

Rapid-Reel® or Reel Quick, Inc. (collectively here after referred to as the "warrantor") will repair or replace this product, free of charge, for a period of 2 years (24 months) from the date of original purchase in the event of defect, malfunction or failure due to material or workmanship. This warranty does not cover damage which occurs in shipment or failures which are caused by products not supplied by the warrantor or failures which result from accidents, misuse, abuse, neglect, mishandling, misapplication, faulty installation, or service by anyone other than warrantor or damage that is attributable to acts of God.

In no event shall the warrantor or its suppliers be liable for any damages, whatsoever, arising out of the use of or inability to use this product. (Some states do not allow the exclusion of limitation of incidental or consequential damages, so the above limitation or exclusion may not apply to you.) The warrantor and its suppliers disclaim all other expressed or implied warranties. Some state do not allow limitations on how long an implied warranty lasts, so the above limitation may not apply to you. This warranty gives you specific legal rights, and you may also have other rights which vary from state to state.

NO POSTAGE NECESSARY IF MAILED IN THE UNITED STATES

BUSINESS REPLY MAIL
FIRST-CLASS MAIL PERMIT NO. 309 LINCOLN NE
POSTAGE WILL BE PAID BY ADDRESSEE

WARRANTY SERVICE CENTER
PO Box 22640
LINCOLN NE 68542-9936